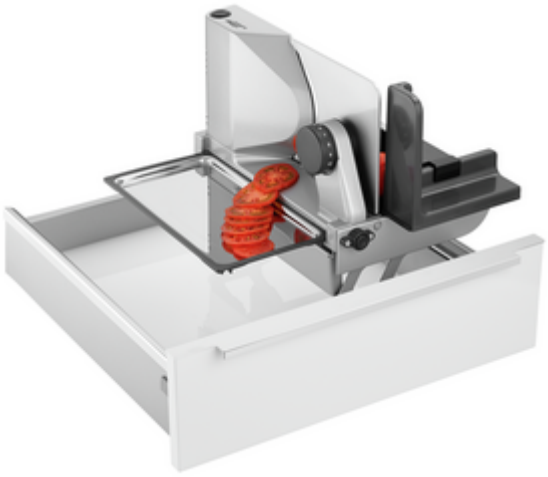

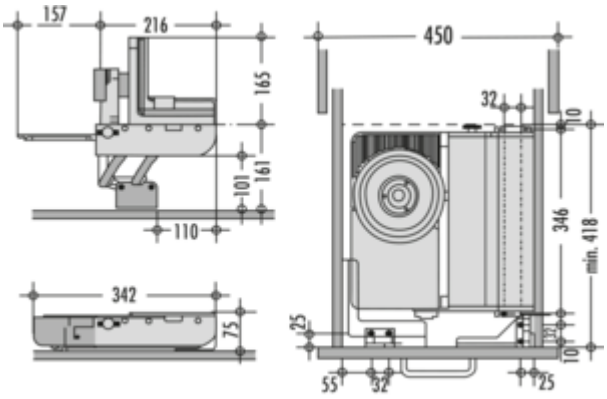

ritter multi-cutter AES 72 SR

Product number: 1111044
Configuration: silver metallic, cuttings guided on the right

Configuration options
1111044 | silver metallic, cuttings guided on the right

✓ Electric slicer
✓ serrated
✓ 2 finger-switch on system

For installation in drawers from 450 mm cabinet width. Prerequisite: clear internal dimension: >344 mm. Stands in front of the worktop.
Distance from drawer bottom to upper worktop edge min. 116 mm, max. 161 mm.
— high-quality all-metal design
— drive: high-performance motor 230 V, 65 watt short-time, operation 5 minutes
— 2 finger safety switching system
— circular blade: electrolytically polished edge Ø 170 mm, serrated
— bayonet quick lock for tool-free blade removal
— cutting width adjustment: up to approx. 14 mm
— fold-in lock when slice thickness set
— stand fitting locks automatically
— cable length 800 mm
— 75 x 342 x 365 mm (H x W x D), weight 4.3 kg
— accessories: cuttings tray made of stainless steel, fixing bracket for finger protection and left-overs holder
— 5 years manufacturer's warranty https://www.ritterwerk.de/garantie

more infos...

Technical data

Article type	Electric slicer
Height	75 mm
Width	342 mm
Material	metal
Mains voltage	230 V
Power	65 watts
Drive	high-performance energy-saving motor 230 V, 65 watt, safety, brief and continuous operation switch, short-time operation 5 minutes

Safety functions	2 finger-switch on system fold-in lock when slicethickness set set-up fitting locks automatically
Material drip tray	stainless steel
Cut thickness	14 mm
Diameter knife	170 mm
Cutting material	cuttings guided on the right
Cut type knife	serrated
More parts	cuttings tray fixing bracket for finger protection and left-overs holder

Spare Parts

1111066	Replacement blade, Accessory, serrated