

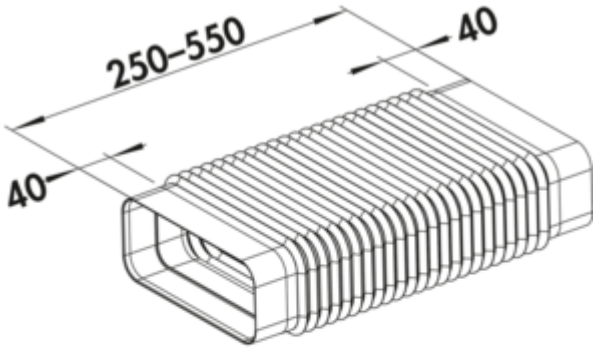

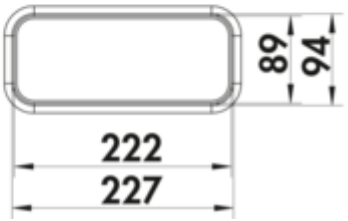

F-RBFLEX 1 system 150 flat duct

Product number: 4043042
Configuration: white

Configuration options
4043042 | white

✓ Connecting element
For diversions and turns up to 90°.
Adapter, flexible, rectangular to rectangular, with integrated sleeve. For connecting flat duct pipes.
— length 250–550 mm

more infos...

Technical data

Article type	Connecting element
Width	250 mm
Material	PVC
Properties	flexible
Suitable for	for deflections up to 90°
Shape	angular

Connection diameter	150 mm
Connection dimension	connection size (222 x 89 mm) for direct connection to the extraction system
System dimension	150
Output drive	angular
Ventilation system	COMPAIR flow 150

Dimensional sketch (PDF)

