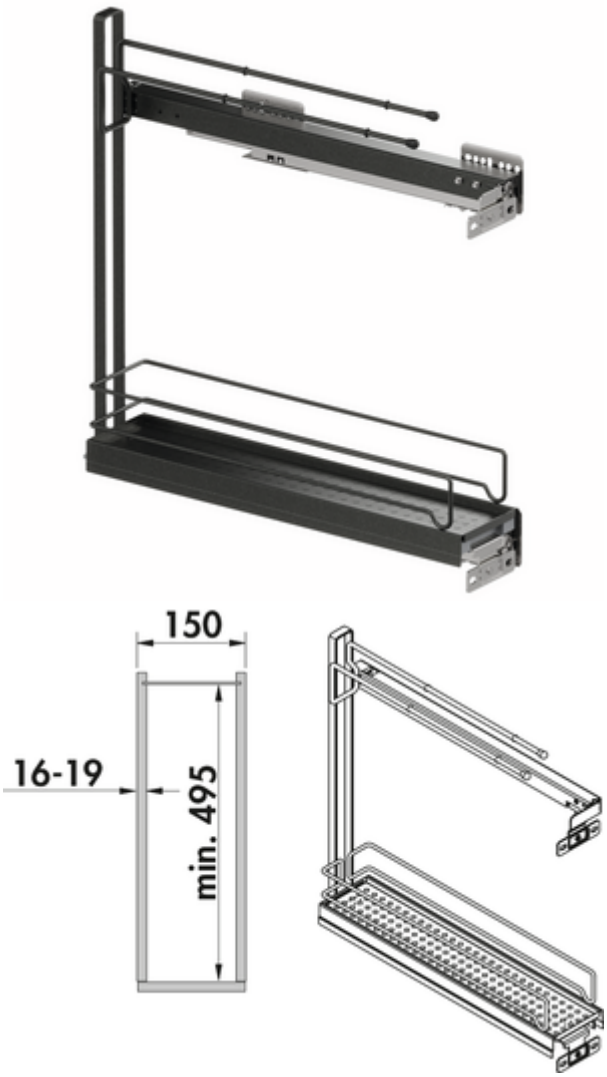

VS SUB Slim towel holder

Product number: 8037146
Configuration: anthracite

Configuration options
8037003 | silver
8037146 | anthracite

✓ Towel holder
✓ Cabinet width: 150 mm
✓ Storage elements can be swivelled in and out independently

Tiered pull-out with towel holder and storage element, incl. complete pull-out runner.
— cabinet width 150 mm
— installation depth min. 495 mm
— installation height min. 530 mm
— end stop only right
— 2-fold towel holder and 1 storage element
— load capacity max. 6 kg per storage element
— integrated damping and self-closing in both runners
— rail silver or chrome
— 3D front adjustment

more infos...

Technical data

Article type	Towel holder
Installation_height_list	530 mm
Cabinet width	150 mm
Consisting of	2-fold towel holder storage element complete pull-out runner
For sidewall thickness	16-19 mm
Installation depth	min. 495 mm

Number of storage elements	1
Number of floors	2
Soft closing	Yes
Stop	right
Colour railing	anthracite