

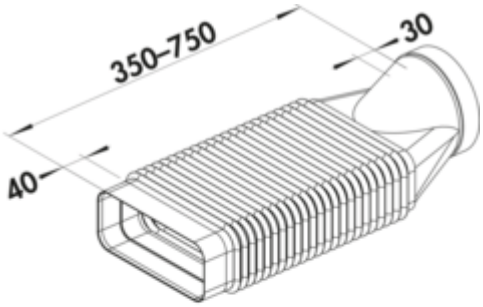

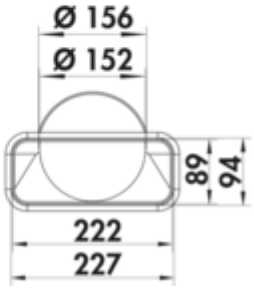

F-RBFLEX 2 system 150 round/rectangular

Product number: 4043043
Configuration: white

Configuration options
4043043 | white

✓ Connecting element
For diversions and turns up to 90°.
Adapter, flexible, round to rectangular, with integrated sleeve.
— length 350–750 mm

more infos...

Technical data

Article type	Connecting element
Width	350 mm
Properties	flexible
Diameter	stainless steel cover Ø 197 mm
Suitable for	diversions and turns up to 90°

Outer diameter	150 mm
Adapter type	Adapter, flexible, round to rectangular, with integrated sleeve
System dimension	150
Output drive	angular round
Ventilation system	COMPAIR flow 150

Naber GmbH
Enschedestr. 24
DE-48529 Nordhorn

Tel. +49 5921 704-0
Fax +49 5921 704-140
naber@naber.com

Dimensional sketch (PDF)

