

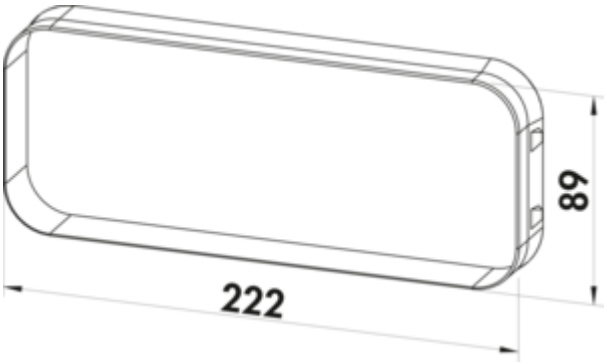

PRIME flow P-Turbo flow 150 wall conduct incl. THERMOBOX

Product number: 4051065
Configuration: white, stainless steel

Configuration options
4051065 | white, stainless steel

✓ Wall sleeve
✓ installation in the wall
✓ N-click system with integrated latching elements

Wall conduct, incl. THERMOBOX heat retention system and **Turbo stainless steel external blind** for installation close to the ground and for conventional installation at ceiling height.
Two-stage installation:
1. Assembly of the separately packaged construction kit
2. Toolless insertion of the heat retention system and the blind

— N-Klick system for secure connection with the universal connector
— direct connection of the flat adapter, round pipe or round pipe bends
— Blower-Door certified (necessary opening pressure >65 Pa)

Raw construction set:
— raw construction set for installation in the wall at any time
— max. wall thickness 550 mm, can be shortened to 220 mm
— core hole drilling in nominal Ø 162 or 164 mm
— hard foam plugs to protect against dirt during the construction phase
— wall sleeve for tool-free installation and sealing against leakage

EDELSTAHL® Rost frei

more infos...

Naber GmbH
Enschedestr. 24
DE-48529 Nordhorn

Tel. +49 5921 704-0
Fax +49 5921 704-140
naber@naber.com

Technical data

Article type	Wall sleeve
Brand	PRIME flow
Material	stainless steel/plastic
Properties	can be shortened
Mounting/Fixing	installation in the wall N-click system with integrated latching elements
Suitable for	direct connection of the flat adapter, round pipe or round pipe bends
Shortenability	can be shortened to 220 mm
Shape	round

Outer diameter	150 mm
Suitable wall thickness	max. wall thickness 550 mm
Wall box version	wall conduct, incl. THERMOBOX heat retention system and Turbo stainless steel external blind for installation close to the ground and for conventional installation at ceiling height
System dimension	150
Output drive	angular
Ventilation system	COMPAIR PRIME flow®
Opening pressure	> 65 Pa
Rohbauset	raw construction set for installation in the wall at any time max. wall thickness 550 mm, can be shortened to 220 mm core hole drilling in nominal Ø 162 mm polystyrene plugs to protect against dirt during the construction phase wall sleeve for tool-free installation and sealing against leakage

Naber GmbH
Enschedestr. 24
DE-48529 Nordhorn

Tel. +49 5921 704-0
Fax +49 5921 704-140
naber@naber.com

Dimensional sketch (PDF)

