


# Asta colour change LED

Product number: 7065057
Configuration: L 1500 mm, 23.2 W, stainl. steel coloured

## Configuration options

7065055 | L 900 mm, 13.9 W, stainl. steel coloured
7065056 | L 1200 mm, 18.6 W, stainl. steel coloured
7065057 | L 1500 mm, 23.2 W, stainl. steel coloured
7065058 | L 900 mm, 13.9 W, black matt
7065059 | L 1200 mm, 18.6 W, black matt
7065060 | L 1500 mm, 23.2 W, black matt

✓ Pendant light
✓ 2700 K warm white to 6500 K cold white
✓ 23.2 watts

Pendant light. Aluminium body. Incl. converter.
— 230 V **(high voltage)**
— stepless control of the light colour from **2700 K** warm white to **6500 K** cold white
— max. 84 lumen/watt at **6500 K** cold white
— memory function: the last setting is saved
— dimmer function: brightness continuously dimmable
— **not dimmable with on-site dimmer**
— suspension max. 1850 mm
— with integrated Zigbee 3.0 controller
— LIC 2.0/MEC LED system compatible
**This product contains a light source of energy efficiency class G**.More information about the LIC/MEC LED system

more infos...

## Technical data

| | | | |
|---|---|---|---|
| Article type | Luminaire | Colour temperature | 2700 K warm white to 6500 K cold white |
| Height | 26,4 mm | Colour temperature adjustable | stepless |
| Width | 1.500 mm | Type of dimming | brightness continuously dimmable |
| Energy efficiency class | G | LIC system compatible | Yes |
| Mains voltage | 230 V | Illuminant type | LED |
| Transformer / converter required | Yes, included | Light yield | max. 84 lumen/watt at 6500 K cold white |
| Mounting/Fixing | Ceiling mounting | Connection | One-sided |
| Material housing | aluminium | Material cover | plastic |
| Certification | CE | Cover colour | white |
| Switch | No | Suspension | 1850 mm |
| Shape | angular | Dimmable by on-site dimmer | No |
| Memory function | Yes | Design | Pendant light |
| Illuminant included | Yes | Dimming function (composite) | Yes, brightness continuously dimmable |
| Dimmer | Yes | Illuminant power | 23.2 watts |
| Housing colour | stainless-steel coloured | | |

## Dimensional sketch (PDF)

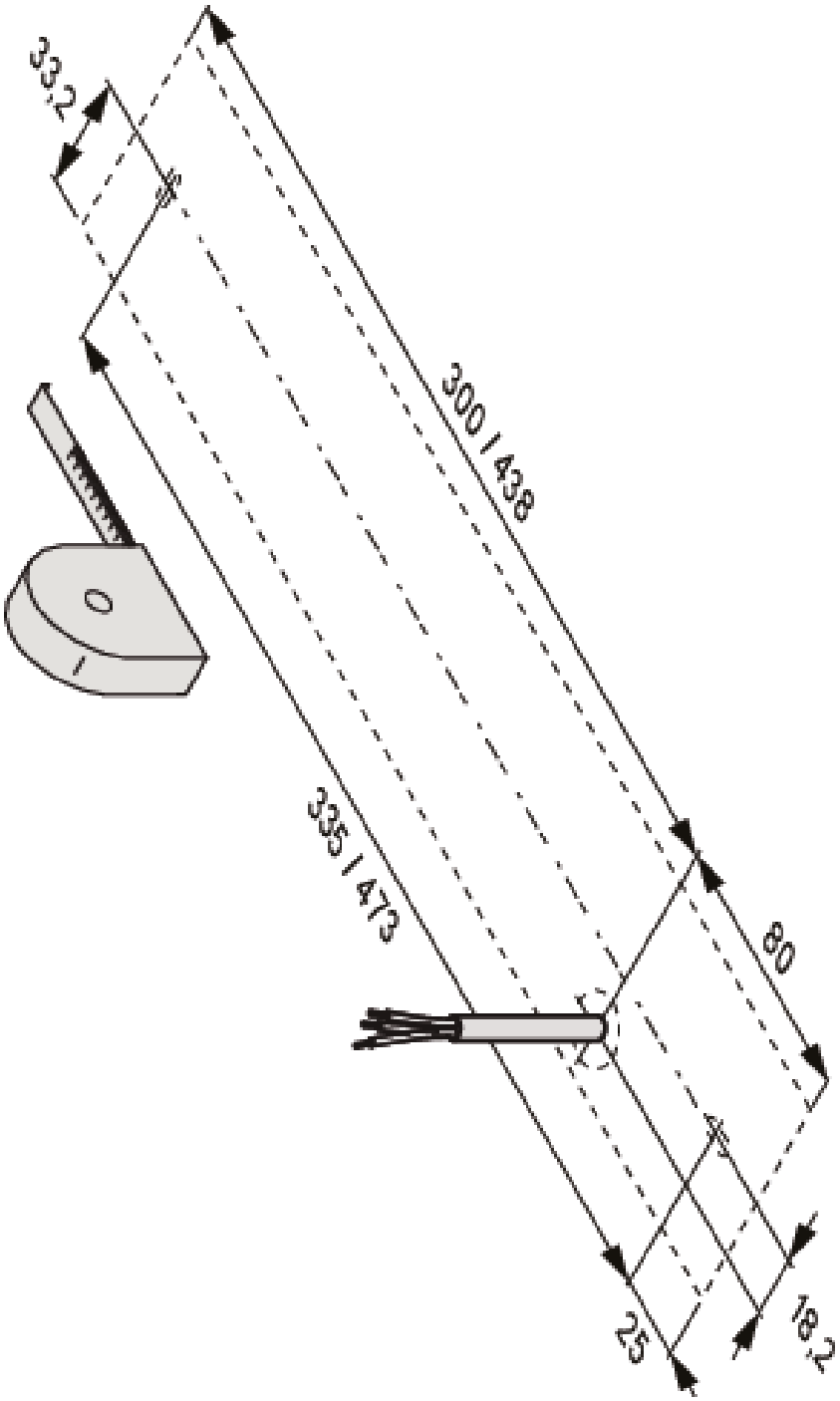


Naber GmbH
Enschedestr. 24
DE-48529 Nordhorn

Tel. +49 5921 704-0
Fax +49 5921 704-140
naber@naber.com