

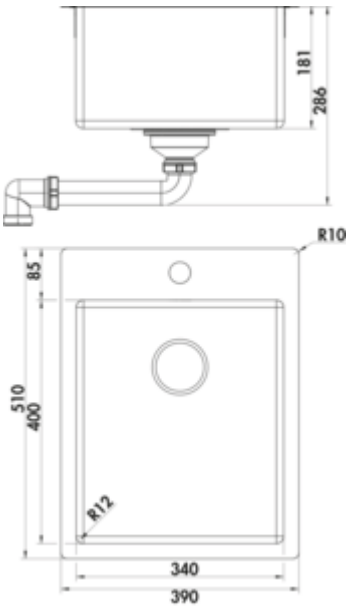

Corno Basso PR2

Product number: 1013144
Configuration: stainless steel

Configuration options
1013144 | stainless steel
1041146 | set (sink and Arco 1 faucet)

✓ Built-in sink
✓ Flush mounted sink
✓ Drain and spill-over fitting

Built-in sink. Single bowl. 3½" drain and spill-over fitting.
Flat edge: also suitable for flush installation
— suitable for worktop thicknesses from 10 mm to 40 mm
— cut-out dimensions ca. 375 x 495 mm (built-in sink)







more infos...

Technical data

Article type	Sink	Height main sink	286 mm
Height	286 mm	Depth main sink	510 mm
Width	390 mm	Flushing radius (R)	10
Material	stainless steel	Maximum worktop material thickness	40 mm
Cabinet width	450 mm	Material thickness worktop minimum	10 mm
Cut-out dimension	approx. 375 x 495 mm (built-in sink)	Number of tap holes	1
Excenter fitting	Drain and spill-over fitting	Armature bench	Yes
Valve type	3½" basket strainer valve flush	Number of holes	1
Overflow	with overflow	Note fitting bore	pre-drilled
Installation variant	Built-in sink Flush mounted sink	Number of sinks	1 main sink
Main sink width	390 mm	Number of overflow points	1

Recommendations

5011250	Arco 1, Sink faucet, chrome, high pressure

Naber GmbH
Enschedestr. 24
DE-48529 Nordhorn

Tel. +49 5921 704-0
Fax +49 5921 704-140
naber@naber.com

Dimensional sketch (PDF)

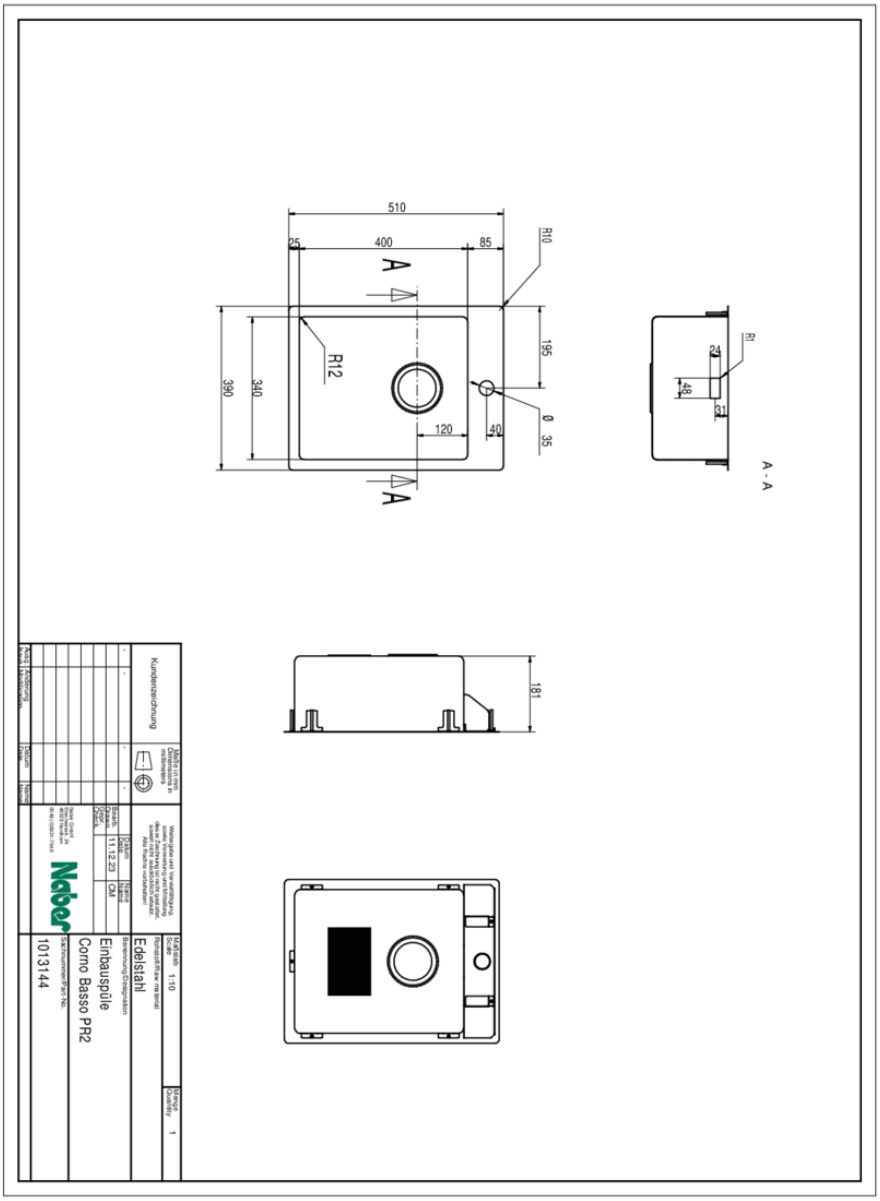

Installation dimensions (PDF)

