

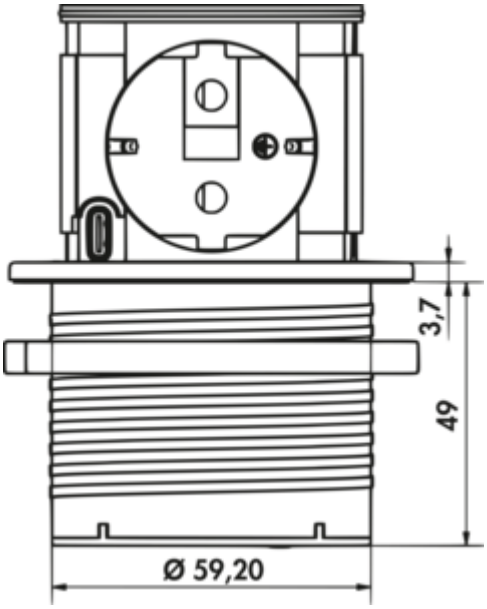

Piccolino UNO

Product number: 7053229
Configuration: cover copper coloured

Configuration options
7053225 | cover stainless steel
7053226 | cover black matt
7053227 | cover white matt
7053228 | cover gunmetal
7053229 | cover copper coloured

✓ Retractable socket element
✓ 1 x earthed plug socket
✓ USB-C 22 W

Socket element. Retractable. With 1 earthed plug socket, 1 USB Type-C charger, 22 watts. For installation in worktops.
— material plastic, black
— 1 x USB charger type C, 5 VDC, IA/I out: 1100 mA
— 2000 mm mains connection line with Schuko plug
— drill Ø ca. 60 mm
— for panel thickness from 16 mm, mounted by screw ring
— cable outlet below

CE

more infos...

Technical data

Article type	Socket element
Height	47,50 mm
Drilling diameter	60 mm
Width	67,80 mm
Material	plastic
Mains voltage	230 V/16 A
Protection class	IP44
Cable outlet	cable outlet below
Mounting/Fixing	installation in the worktop
Note	can be retrofitted
Certification	CE
Length of the supply line (primary)	2.000 mm
Installation depth	48 mm
Version sockets	1 x earthed plug socket

Mains plug loosely enclosed	Yes
Colour bezel	copper coloured
Colour socket	black
Height extended	48,5 mm
Number of USB ports	1
USB type	USB-C
Type of socket element	Retractable socket element
Rated current	16 A
Number of sockets (total)	1
Opening mechanism	Push-to-open
Touch protection ("child safety lock")	with increased contact protection
Worktop thickness	from 16 mm
USB version	1 x USB charger type A, 5 VDC, IA/I out: 1000 mA
smart charging	Yes

Installation dimensions (PDF)

