

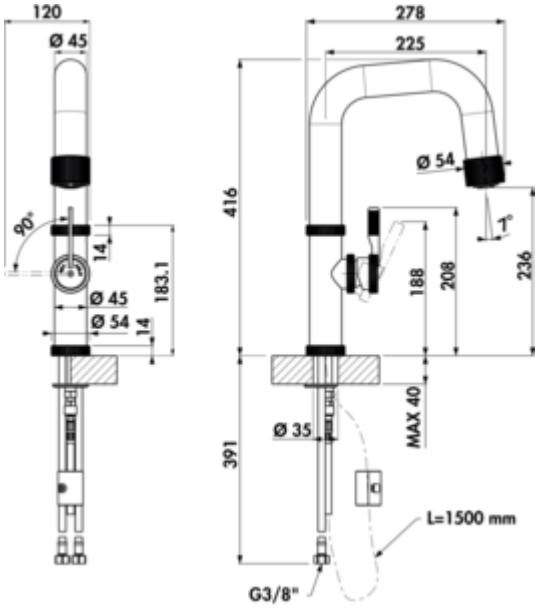

LINEA Raw

Product number: 5011275
Configuration: graphite, high pressure

Configuration options
5011275 | graphite, high pressure

✓ Sink faucet
✓ high pressure

Single lever faucet. With metallic **swivelling/pull-out** hose with shower head (can be switched to stream or shower), side lever and ceramic cartridge.
— swivel range 360°
— drill Ø 35 mm
— corresponds to the German and European drinking water regulation/directive

KERAMISCHE DICHTUNG

more infos...

Naber GmbH
Enschedestr. 24
DE-48529 Nordhorn

Tel. +49 5921 704-0
Fax +49 5921 704-140
naber@naber.com

Technical data

Article type	Sink faucet
Brand	LINEA
Number of handles	1
Total installation height	416 mm
Height	416 mm
Outreach	225 mm
Discharge height	236 mm
Operating mode	Lever
Drilling diameter	35 mm
Handle position	side lever
Cartridge with ceramic sealing discs	Yes
Swivel range outlet	360°
Beam type	Shower jet Comfort beam
Type of fitting	Single lever faucet

Operating pressure	high pressure
Width	54 mm
Material	brass
Worktop thickness	40 mm
Swivel range handle	90 °
Number of tap holes	1
Cartridge size	35 mm
Convertible jet/shower	Yes
Angle of inclination of aerator	1 °
Type of hose shower	with metallic swivelling/pull-out hose with shower head (can be switched to stream or shower)
Connection type	G 3/8“ F
Connection size	DN 15
Connection hoses	450 mm

Naber GmbH
Enschedestr. 24
DE-48529 Nordhorn

Tel. +49 5921 704-0
Fax +49 5921 704-140
naber@naber.com