

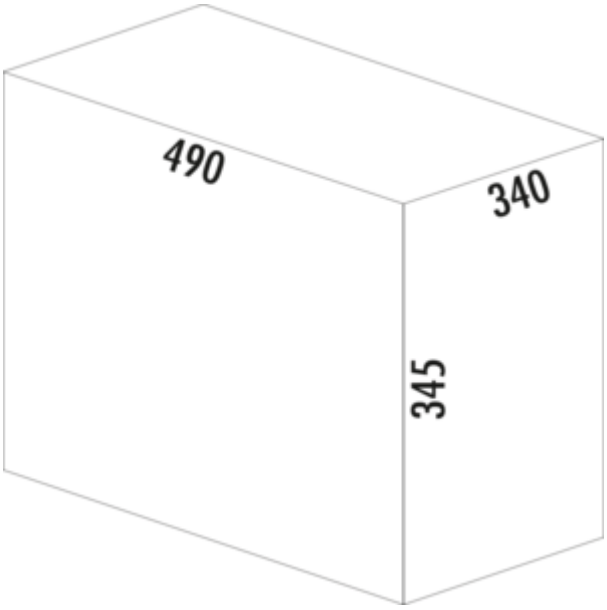

WESCO® Profiline Double-Master® 345 S/ 400-2

Product number: 8012086
Configuration: anthracite

Configuration options
8012086 | anthracite

✓ Pull-out technology for rotating doors
✓ full pull-out
✓ 32 l
— waste capacity 32 (2 x 16) l
— technology: full pull-out
— frame/guide silver
— complete lid anthracite
— fitting: cabinet bottom
— **the ideal space saver with an installation height of only 345 mm**

more infos...

Technical data

Article type	Waste collection system	Colour total cover	anthracite
Brand	WESCO®	Cover	Yes
Height	345 mm	Lid type(s)	Complete lid
Width	340 mm	Number of containers	2
Mounting/Fixing	cabinet bottom	Opening technology	full pull-out
Installation_height_list	345 mm	Total volume	32 l
Cabinet width	400 mm	Volume/content container 1	16 l
Shape	angular	Volume/content container 2	16 l
Frame colour	silver	Colour guide	silver
Installation depth	490 mm	Design	Pull-out technology for rotating doors
Material lid	plastic	Volume/Content container	16/16
Material container	plastic		

Spare Parts

8010097	Wire hanger bucket, Single bucket, anthracite, 16 l
8010093	Complete Lid, Lid, anthracite
8011489	Closing-lid, Accessory, anthracite, for 15/16/17/20 l

Naber GmbH
Enschedestr. 24
DE-48529 Nordhorn

Tel. +49 5921 704-0
Fax +49 5921 704-140
naber@naber.com

Dimensional sketch (PDF)

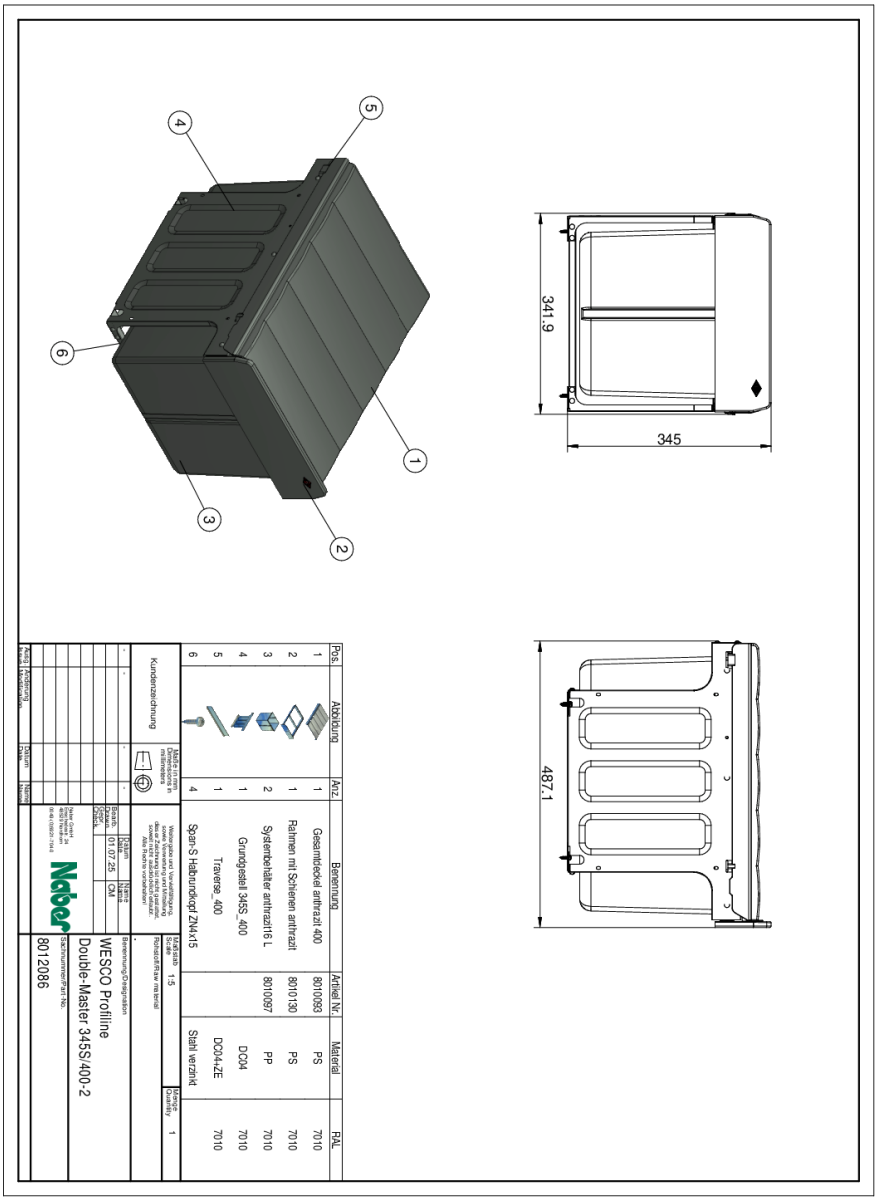

Pos.	Abbildung	Anz.	Benennung	Artikel Nr.	Material	RAL
1		1	Gesamtdeckel anthrazit 400	8010093	PS	7010
2		1	Rahmen mit Schienen anthrazit	8010130	PS	7010
3		2	Systembehälter anthrazit16 L	8010097	PP	7010
4		1	Grundgestell 345S_400		DC04	7010
5		1	Traverse_400		DC04-zE	7010
6		4	Span S Halbrundkopf ZM4x15		Stahl verzinkt	7010

Kundenzeichnung

Maße in mm / Dimensions in millimeters

Werkstoff/Raw material

Bemerkung/Designation

Maßstab / Scale 1:5

Blatt / Sheet 1

Datum / Date

Name

Bearb. / Drawn 01.07.25 CM

Gepr. / Check

Naber GmbH Enschedestr. 24 48529 Nordhorn

Sachnummer/Part No. 8012086

WESCO Profiline

Double-Master 345S/400-2