

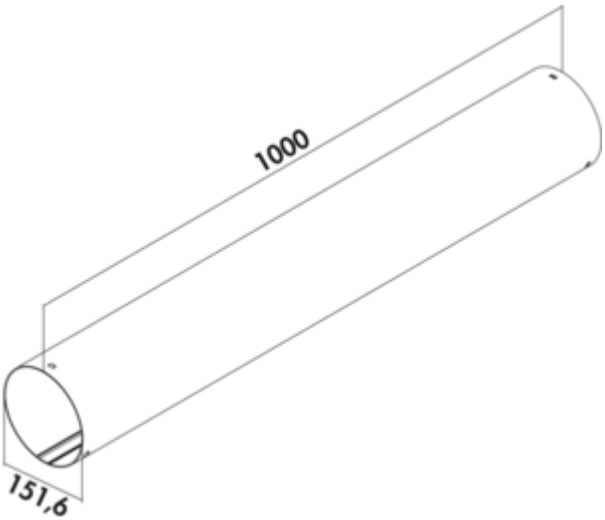

PRIME flow P-RRO 150 round pipe

Product number: 4051023
Configuration: L 1000 mm, light grey

Configuration options
4051022 | L 500 mm, light grey
4051023 | L 1000 mm, light grey

✓ Ventilation pipe
✓ N-click system with integrated latching elements
— N-Klick system for secure connection with the universal connector
— cable routing in ventilation duct (optional)

more infos...

Technical data

Article type	Ventilation pipe	Connection diameter	150 mm
Brand	PRIME flow	System dimension	150
Width	1.000 mm	Output drive	round
Material	PVC	Ventilation system	COMPAIR PRIME flow®
Mounting/Fixing	N-click system with integrated latching elements	Cable routing	Optional
Note	cable routing in ventilation duct (optional)		

Dimensional sketch (PDF)

