

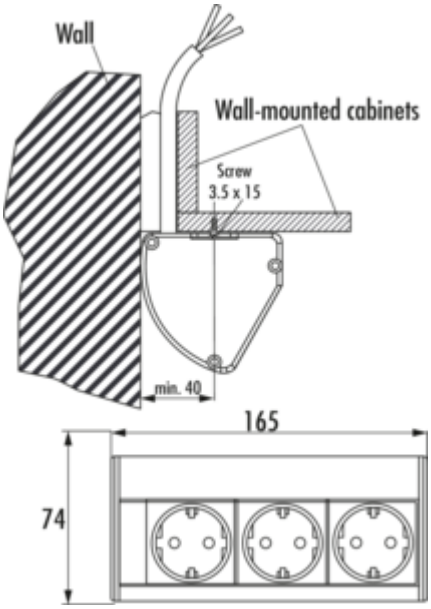

Evoline® Dock

Product number: 8031133
Configuration: stainless steel coloured

Configuration options
8031113 | black matt
8031133 | stainless steel coloured

✓ Surface-mounted socket element
✓ Corner socket element
✓ 3 x earthed plug socket

Socket element. 3-fold. Especially suited for installation below wall-mounted cabinets or under shelves.
— 2 x fastening elements enclosed loosely
— 74 x 165 x 75 mm (H x W x D)
— 2500 mm mains connection line, earthing contact plug enclosed loosely
— cable outlet back (below/top)

more infos...

Technical data

Article type	Socket element	Version sockets	3 x earthed plug socket
Height	74 mm	Housing colour	stainless-steel coloured
Width	165 mm	Mains plug loosely enclosed	Yes
Cable outlet	cable outlet back (below/top)	Colour socket	black
Mounting/Fixing	Base unit installation (wall unit/shelf)	Type of socket element	Surface-mounted socket element Corner socket element
Certification	CE TÜV	Wiring	3-wire with free ends
Shape	angular	Number of sockets (total)	3
Length of the supply line (primary)	2.500 mm	Touch protection ("child safety lock")	with increased contact protection