

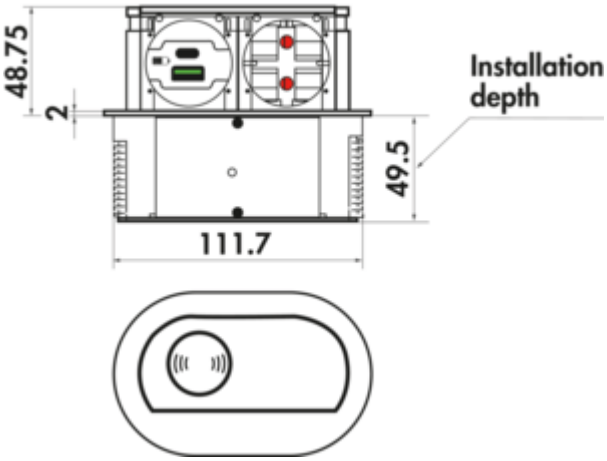

Piccolino QI USB A/C

Product number: 7053201
Configuration: cover in glossy black coloured glass

Configuration options
7053201 | cover in glossy black coloured glass

✓ Built-in socket element
✓ 1 x earthed plug socket
✓ USB-A

Socket element. Retractable. With 1 earthed socket, double USB charger A/C and QI charging function in the lid. For installation in worktops.
— material plastic, black
— cover black glossy glass
— 1 x USB charger type A, 5 VDC,IA/I out: 1100mA
— 1 x USB charger type C, 5 VDC,IA/I out: 1100mA
— 2000 mm mains connection line with earthed plug
— drill Ø ca. 68 mm
— for worktop thicknesses from 16 mm, fixing via threaded ring
— cable outlet underneath

CE

more infos...

Technical data

Article type	Socket element
Drilling diameter	68 mm
Width	111,7 mm
Cable outlet	cable outlet below
Mounting/Fixing	fixing via threaded ring
Material housing	plastic
Material fascia	glass
Certification	CE
Length of the supply line (primary)	2.000 mm
Installation depth	49,5 mm
Version sockets	1 x earthed plug socket
Flush mountable	Yes, H 2 mm
Mains plug loosely enclosed	Yes

Colour socket	black
Height extended	48,75 mm
Qi charging surface	Yes
Number of USB ports	2
USB type	USB-A USB-C
Total charging current	1100 mA
Type of socket element	Built-in socket element
Number of sockets (total)	1
Opening mechanism	Push-to-open
Worktop thickness	from 16 mm
USB version	1 x USB charger type A, 5 VDC,IA/I out: 1100mA 1 x USB charger type C, 5 VDC,IA/I out: 1100mA
smart charging	Yes