

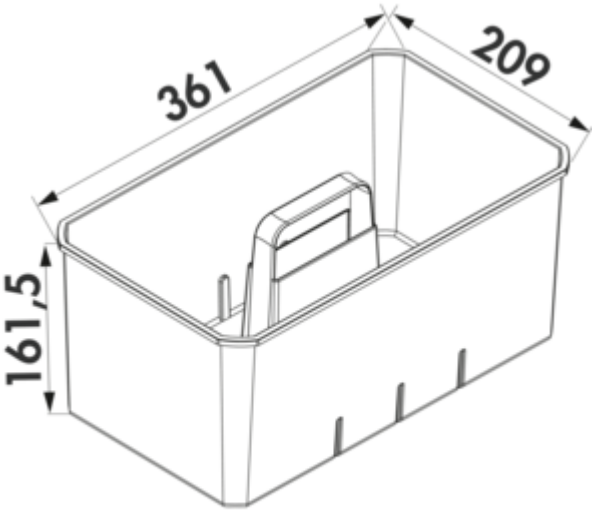

Cox Work® Garden

Product number: 8012521
Configuration: set 1, incl. small parts box

Configuration options
8012520 | Cox Work® Box
8012521 | set 1, incl. small parts box
8012522 | set 2, incl. small parts box, 2 x U-divider/V-divider

✓ Number of containers: 1

✓ Utensil box

Utensil box. For storage of, e.g. brushes, cleaners, tabs and cloths.
— mobile utensil box, green
— various applications
— can be integrated into all Cox® container systems with Cox® system dimensions 230 x 382 mm

more infos...

Technical data

Article type	Utensil box	Shape	angular
Height	161,5 mm	Cover	No
Width	361 mm	Number of containers	1
Material	plastic		

Naber GmbH
Enschedestr. 24
DE-48529 Nordhorn

Tel. +49 5921 704-0
Fax +49 5921 704-140
naber@naber.com

Dimensional sketch (PDF)

