

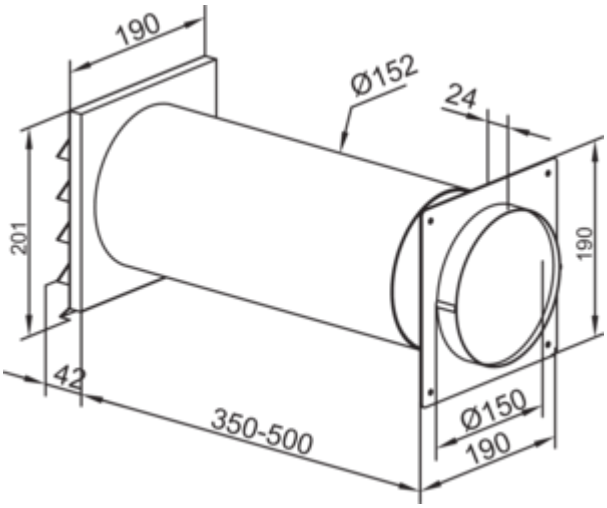

E-Jal 150 wall conduct incl. THERMOBOX

Product number: 4043065
Configuration: white, stainless steel

Configuration options
4043065 | white, stainless steel

✓ Wall sleeve
Wall conduct with telescopic pipe, incl. built-in heat retention system THERMOBOX and **stainless steel external E-Jal**.
— hose/pipe connection Ø 150 mm
— connection depth 24 mm
— installation depth 350–500 mm, can be shortened to 255 mm
— wall penetration Ø ca. 155 mm
— Blower-Door certified (required opening pressure >65 Pa)

EDELSTAHL® Rost frei

more infos...

Technical data

Article type	Wall sleeve
Height	201 mm
Width	190 mm
Material	stainless steel
Properties	can be shortened
Certification	stainless
Shape	angular
Outer diameter	150 mm

Support depth	24 mm
Diameter wall opening	155 mm
Installation depth	350–500 mm
Wall box version	wall conduct with telescopic pipe, incl. built-in heat retention system THERMOBOX and stainless steel external E-Jal
Pipe socket dimension	hose/pipe connector Ø 150 mm
System dimension	150
Output drive	round
Ventilation system	COMPAIR flow 150

Dimensional sketch (PDF)

