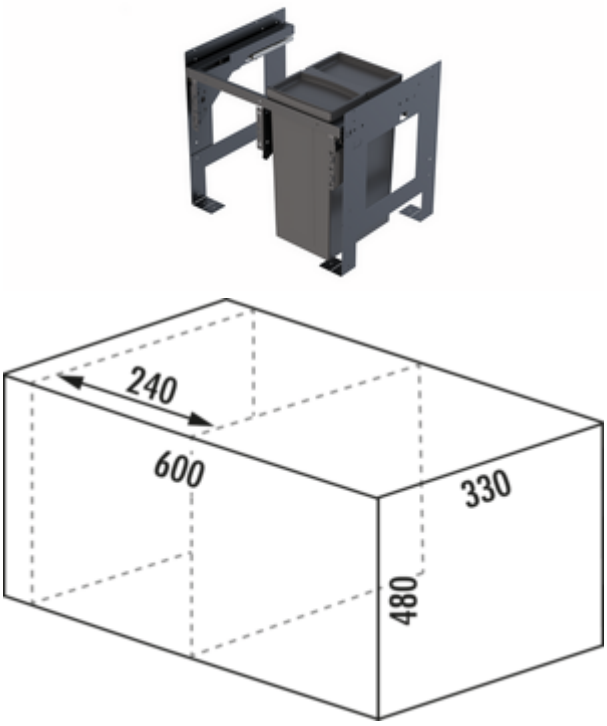

WESCO® Pullboy Soft Fusion® 480 K/600-1

Product number: 8011734
Configuration: anthracite, installation on the right

Configuration options
8011734 | anthracite, installation on the right

✓ Front pull-out system
✓ 29 l
✓ Number of containers: 1
— guide rail depth 420 mm
— waste volume 29 (1 x 29) l
— incl. single lid
— afmetingen: 480 x 562 x 330 mm (H x W x D)
— installation: side wall mounting with front panel
— for 16/19 mm side walls
— **with soft retraction and dampin**
— **suitable for a reservoir with a width of 240 mm**
— **The reservoirs needs to be positioned on the left.**

more infos...

Technical data

Article type	Waste collection system
Brand	WESCO®
Height	480 mm
Width	562 mm
Properties	flexible space saving
Mounting/Fixing	front panel side wall
Note	The reservoir needs to be positioned on the left.
Cabinet width	600 mm
Suitable for	suitable for a reservoir with a width of 240 mm
Shape	angular
Frame colour	orion grey
For sidewall thickness	16/19 mm
Material container	plastic

Cover	Yes
Lid type(s)	Closing-lid
Number of containers	1
Total volume	29 l
Volume/content container 1	29 l
Soft closing	Yes
Colour guide	orion grey
Colour container lid	orion grey
Design	Front pull-out system
Volume/Content container	29
Guide rail depth	420 mm
Single bucket can be removed	Yes
Locking mechanism	With damper

Recommendations

8011798	Pullboy Soft Fusion® lid system, Waste collection system, anthracite, H 342 mm
8011799	Pullboy Soft Fusion® lid system, Waste collection system, anthracite, H 492 mm