

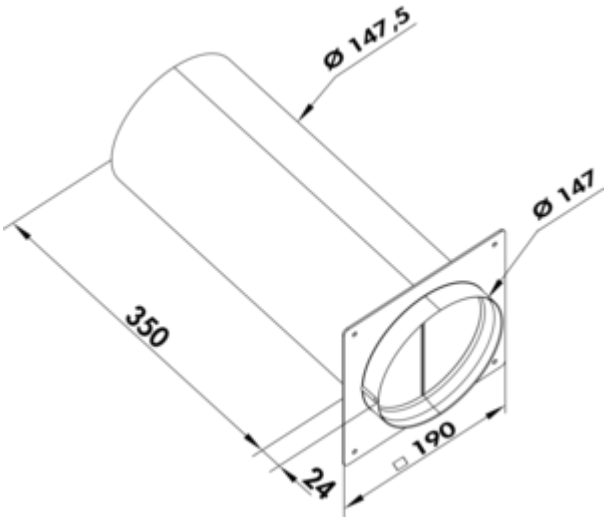

150 wall connector 1

Product number: 4043025
Configuration: white

Configuration options
4043025 | white

✓ Connecting element
✓ Plug-in system for subsequent gluing
✓ with backpressure shutter

For connection to round pipe 150
— with backpressure shutter
— hose/pipe connector Ø 150 mm
— connector depth 24 mm
— round pipe with 350 mm length
— wall penetration Ø ca. 155 mm

more infos...

Technical data

Article type	Connecting element	Diameter wall opening	155 mm
Width	350 mm	Connection diameter	150 mm
Material	Polystyrene	Pipe socket dimension	hose/pipe connector Ø 150 mm
Mounting/Fixing	Plug-in system for subsequent gluing	Blind version	with backpressure shutter
Shape	round	System dimension	150
Support depth	24 mm	Output drive	round

Naber GmbH
Enschedestr. 24
DE-48529 Nordhorn

Tel. +49 5921 704-0
Fax +49 5921 704-140
naber@naber.com

Dimensional sketch (PDF)

