

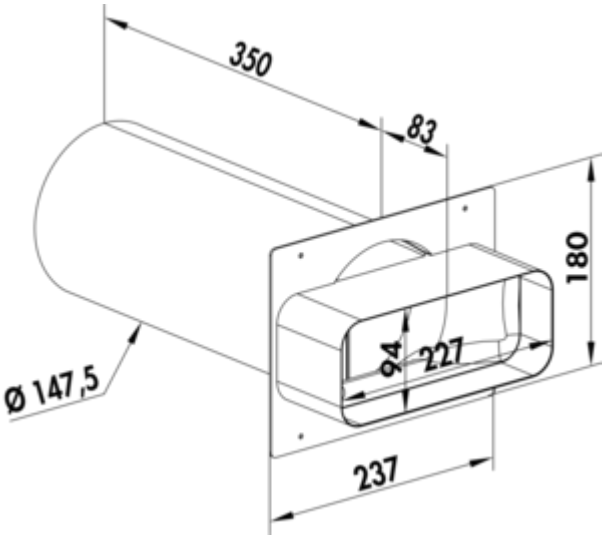

150 wall connector 2

Product number: 4043028
Configuration: white

Configuration options
4043028 | white

✓ Connecting element
✓ Plug-in system for subsequent gluing
✓ with backpressure shutter

For connection to flow rectangular pipe.
— with backpressure shutter
— pipe connector 227 x 94 mm
— connector depth 80 mm
— round pipe with 350 mm length
— wall penetration Ø ca. 155 mm

more infos...

Technical data

Article type	Connecting element	Connection diameter	150 mm
Material	Polystyrene	Pipe socket dimension	pipe connector 227 x 94 mm
Mounting/Fixing	Plug-in system for subsequent gluing	Blind version	with backpressure shutter
Shape	round	System dimension	150
Support depth	80 mm	Output drive	angular
Diameter wall opening	155 mm		

Dimensional sketch (PDF)

