

LINEA Fuoco 1

Product number: 5011326
Configuration: black matt, high pressure

Configuration options
5011320 | chrome, high pressure
5011321 | chrome, low pressure
5011322 | stainless steel finish, high pressure
5011323 | stainless steel finish, low pressure
5011326 | black matt, high pressure
5011327 | black matt, low pressure

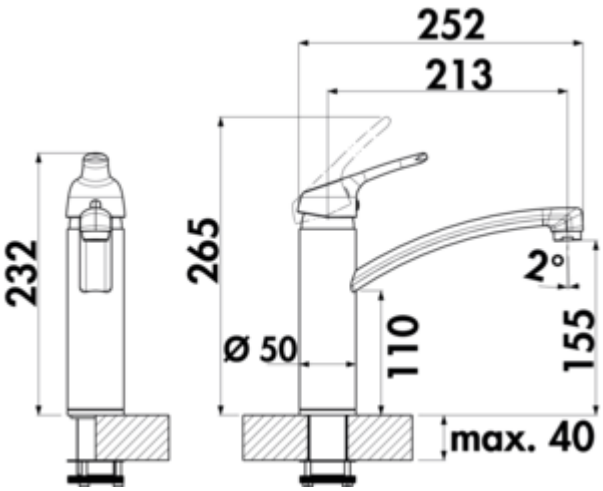

✓ Sink faucet
✓ high pressure
✓ with swivelling outlet

Single lever mixer. With swivelling outlet, laminar aerator and ceramic cartridge.
— swivel range 360°
— drill Ø 35 mm
— corresponds to the German and European drinking water regulation/directive

BELGAQUA

KERAMISCHE DICHTUNG

more infos...

Technical data

Article type	Sink faucet	Type of fitting	Single lever faucet
Brand	LINEA	Operating pressure	high pressure
Number of handles	1	Width	50 mm
Total installation height	232 mm	Material	brass
Height	232 mm	Surface/coating	powder coated
Outreach	213 mm	Worktop thickness	40 mm
Outlet	with swivelling outlet	Number of tap holes	1
Discharge height	155 mm	Cartridge size	35 mm
Operating mode	Lever	Angle of inclination of aerator	2 °
Drilling diameter	35 mm	Connection type	G 3/8“ F
Handle position	top	Connection size	DN 15
Cartridge with ceramic sealing discs	Yes	Connection hoses	600 mm
Swivel range outlet	360°		

Dimensional sketch (PDF)

