

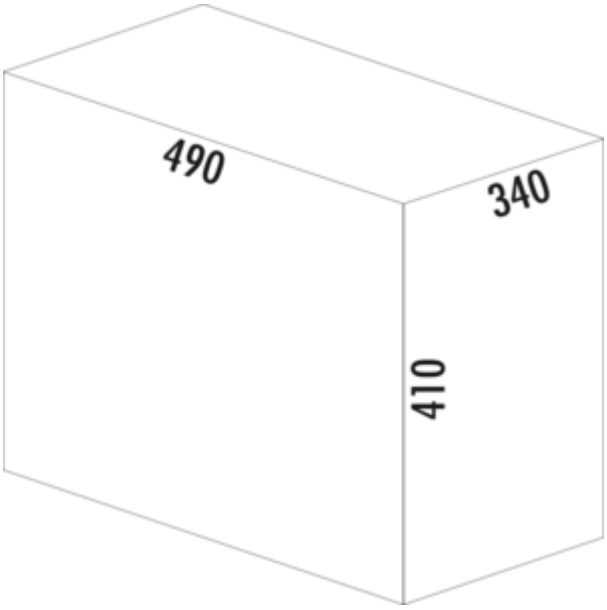

WESCO® Profiline Double-Master® 410 S/ 400-2

Product number: 8012077
Configuration: anthracite

Configuration options
8012077 | anthracite

✓ Pull-out technology for rotating doors
✓ full pull-out
✓ 40 l
— waste capacity 40 (2 x 20) l
— technology: full pull-out
— frame/guide silver
— complete lid anthracite
— fitting: cabinet bottom
— **the ideal space saver with an installation height of only 410 mm**

more infos...

Technical data

Article type	Waste collection system	Colour total cover	anthracite
Brand	WESCO®	Cover	Yes
Height	410 mm	Lid type(s)	Complete lid
Width	340 mm	Number of containers	2
Mounting/Fixing	cabinet bottom	Opening technology	full pull-out
Installation_height_list	410 mm	Total volume	40 l
Cabinet width	400 mm	Volume/content container 1	20 l
Shape	angular	Volume/content container 2	20 l
Frame colour	silver	Colour guide	silver
Installation depth	490 mm	Design	Pull-out technology for rotating doors
Material lid	plastic	Volume/Content container	20/20
Material container	plastic		

Spare Parts

8010099	Wire hanger bucket, Single bucket, anthracite, 20 l
8010093	Complete Lid, Lid, anthracite
8011489	Closing-lid, Accessory, anthracite, for 15/16/17/20 l

Naber GmbH
Enschedestr. 24
DE-48529 Nordhorn

Tel. +49 5921 704-0
Fax +49 5921 704-140
naber@naber.com

Dimensional sketch (PDF)

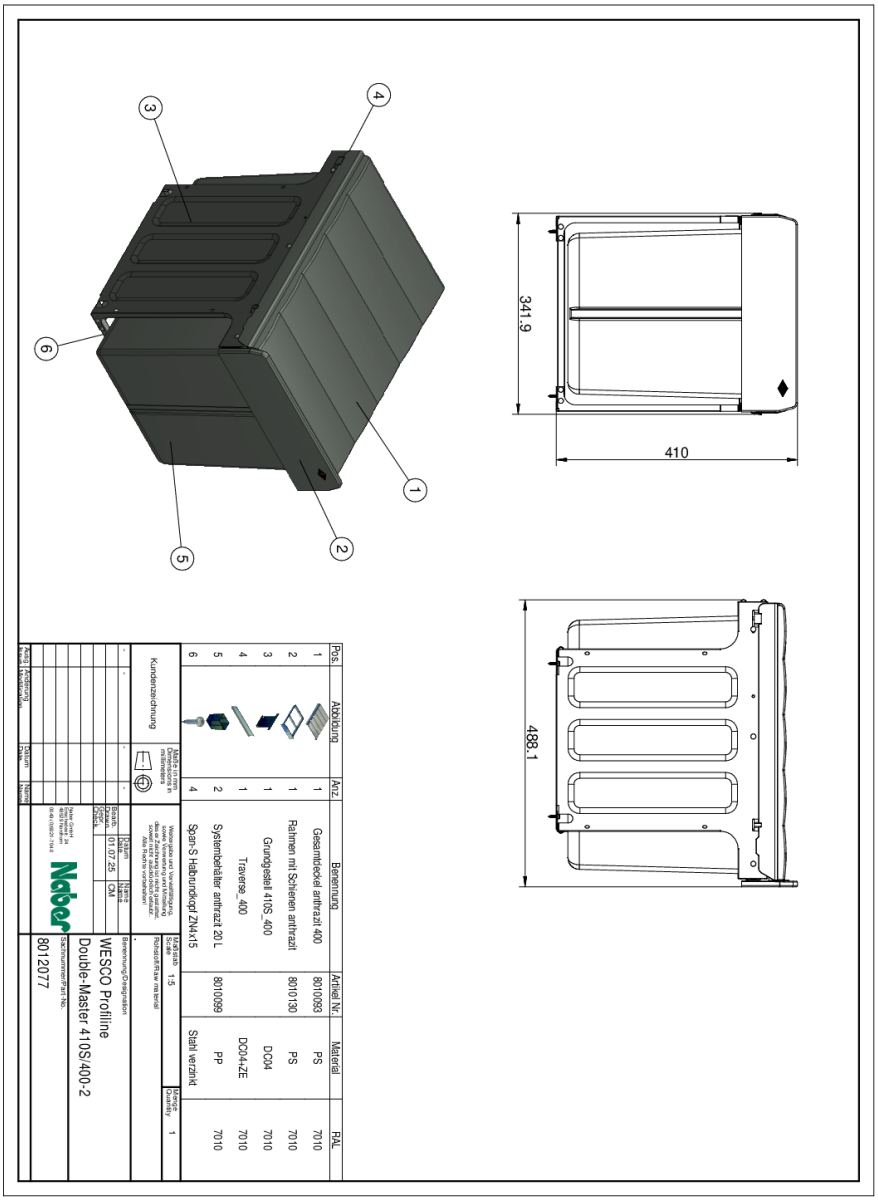

Pos.	Abbildung	Anz.	Benennung	Artikel Nr.	Material	RAL
1		1	Gesamtdeckel anthrazit 400	8010093	PS	7010
2		1	Rahmen mit Schienen anthrazit	8010130	PS	7010
3		1	Grundgestell 410S_400		DC04	7010
4		1	Traverse_400		DC04-ZE	7010
5		2	Systembehälter anthrazit 20 L	8010099	PP	7010
6		4	Span S Halbrundkopf ZM4x15		Stahl verzinkt	

Kundenzeichnung

Maße in mm / Dimensions in millimeters

Maßstab / Scale 1:5

Benennung/Zeichnungsnr. / Description/Drawing no.

Rohteil/Raw material

Stück / Quantity 1

Name: CM

Datum: 01.07.25

Sachnummer/Part No. 8012077

WESCO Profiline

Double-Master 410S/400-2

Naber GmbH
Enschedestr. 24
DE-48529 Nordhorn

Tel. +49 5921 704-0
Fax +49 5921 704-140
naber@naber.com

naber.com