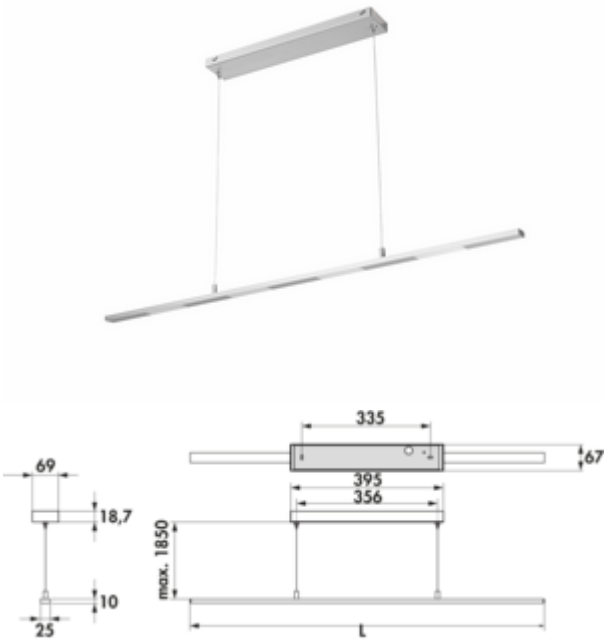

Guidance colour change LED

Product number: 7065040
Configuration: L 900 mm, 12.4 W, stainless steel coloured

Configuration options
7065040 | L 900 mm, 12.4 W, stainless steel coloured

✓ Pendant light
✓ 2700 K warm white to 6500 K cold white
✓ 12.4 watts

Pendant light. Aluminium body. Incl. converter and 1-channel colour change remote control.
— 230 V
— stepless control of the light colour from **2700 K** warm white to **6500 K** cold white
— memory function: the last setting is saved
— dimmer function: brightness continuously dimmable
— **not dimmable with on-site dimmer**
— max. 83 lumen/watt at **6500 K** cold white
— suspension max. 1850 mm
— can be operated with the 1- or 4-channel radio remote control
— LIC LED system compatible
This product contains a light source of energy efficiency class G.

more infos...

Technical data

Article type	Luminaire	Colour temperature	2700 K warm white to 6500 K cold white
Height	10 mm	Colour temperature adjustable	stepless
Width	900 mm	Type of dimming	brightness continuously dimmable
Energy efficiency class	G	LIC system compatible	Yes
Mains voltage	230 V	Illuminant type	LED
Transformer / converter required	Yes, included	Replaceable illuminant	No
Mounting/Fixing	Ceiling mounting	Light yield	83 lumen/watt
Material housing	aluminium	Connection	One-sided
Switch	No	Suspension	1850 mm
Shape	straight	Dimmable by on-site dimmer	No
Memory function	Yes	Design	Pendant light
Illuminant included	Yes	Dimming function (composite)	Yes, brightness continuously dimmable
Dimmer	Yes	Illuminant power	12.4 watts
Housing colour	stainless-steel coloured		

Dimensional sketch (PDF)

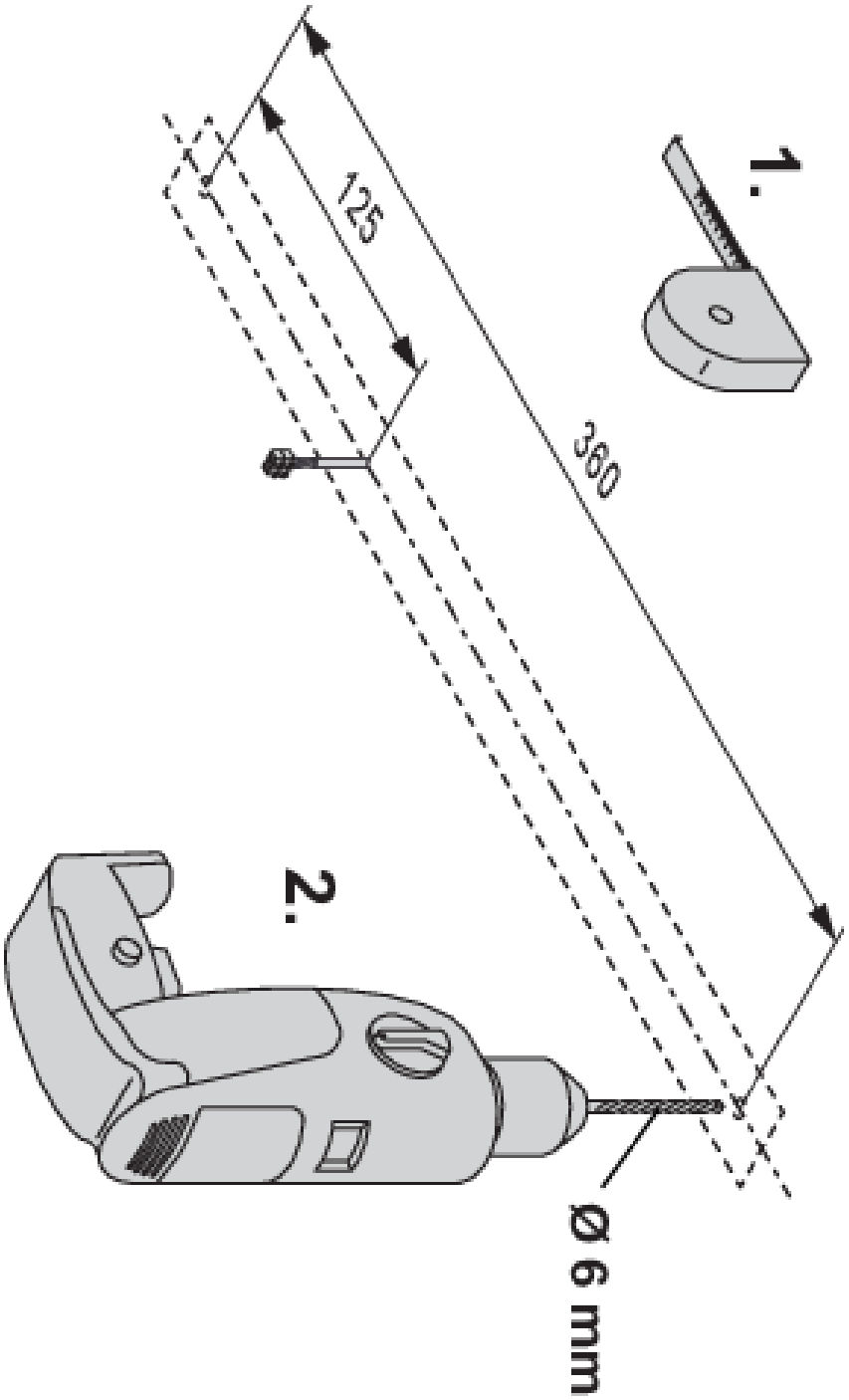

Naber GmbH
Enschedestr. 24
DE-48529 Nordhorn

Tel. +49 5921 704-0
Fax +49 5921 704-140
naber@naber.com