

Asta colour change LED

Product number: 7065059
Configuration: L 1200 mm, 18.6 W, black matt

Configuration options

7065055 | L 900 mm, 13.9 W, stainl. steel coloured
7065056 | L 1200 mm, 18.6 W, stainl. steel coloured
7065057 | L 1500 mm, 23.2 W, stainl. steel coloured
7065058 | L 900 mm, 13.9 W, black matt
7065059 | L 1200 mm, 18.6 W, black matt
7065060 | L 1500 mm, 23.2 W, black matt

✓ Pendant light
✓ 2700 K warm white to 6500 K cold white
✓ 18.6 watts

Pendant light. Aluminium body. Incl. converter.
— 230 V **(high voltage)**
— stepless control of the light colour from **2700 K** warm white to **6500 K** cold white
— max. 84 lumen/watt at **6500 K** cold white
— memory function: the last setting is saved
— dimmer function: brightness continuously dimmable
— **not dimmable with on-site dimmer**
— suspension max. 1850 mm
— with integrated Zigbee 3.0 controller
— LIC 2.0/MEC LED system compatible
This product contains a light source of energy efficiency class G.More information about the LIC/MEC LED system

more infos...

Technical data

Article type	Luminaire	Colour temperature	2700 K warm white to 6500 K cold white
Height	26,4 mm	Type of dimming	brightness continuously dimmable
Width	1.200 mm	LIC system compatible	Yes
Energy efficiency class	G	Illuminant type	LED
Mains voltage	230 V	Light yield	max. 84 lumen/watt at 6500 K cold white
Transformer / converter required	Yes, included	Connection	One-sided
Mounting/Fixing	Ceiling mounting	Material cover	plastic
Material housing	aluminium	Cover colour	white
Shape	angular	Suspension	1850 mm
Memory function	Yes	Dimmable by on-site dimmer	No
Illuminant included	Yes	Design	Pendant light
Dimmer	Yes	Dimming function (composite)	Yes, brightness continuously dimmable
Housing colour	black matt	Illuminant power	18.6 watts

Dimensional sketch (PDF)

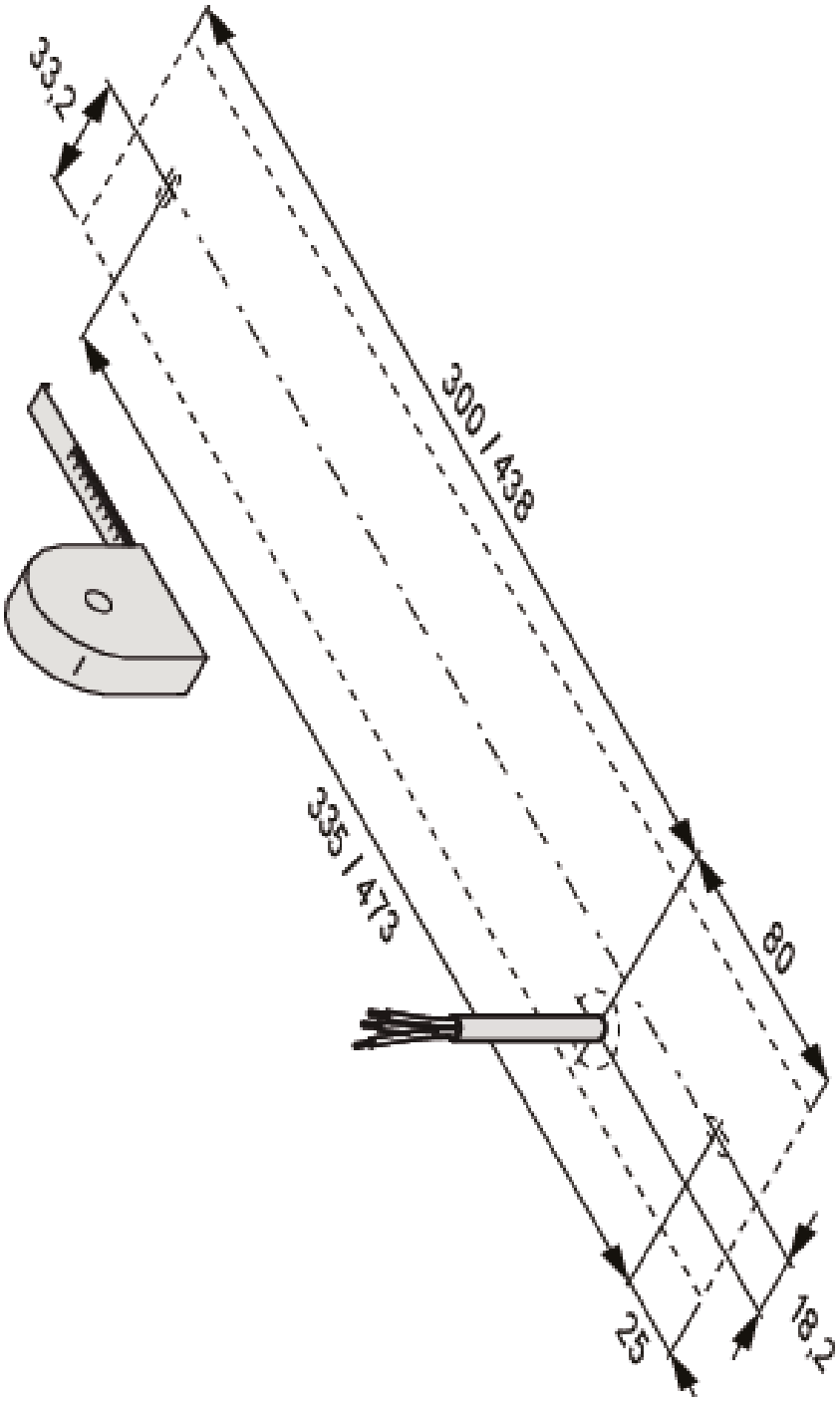

Naber GmbH
Enschedestr. 24
DE-48529 Nordhorn

Tel. +49 5921 704-0
Fax +49 5921 704-140
naber@naber.com